PROJECT REFERENCE NO.	SHEET NO.
	Sig.

STATE OF NORTH CAROLINA
DEPT. OF TRANSPORTATION
DIVISION OF HIGHWAYS
RALEIGH, N.C.

5-07

ENGLISH DETAIL DRAWING FOR
INDUCTIVE DETECTION LOOPS

SHEET 1 OF 3

1725D01

CONVENTIONAL 4-SIDED LOOP

SAW SLOT DEPTH CHART

DEPTH (IN)	NO. OF WIRE TURNS				
	2	3	4	5	6
CONCRETE	2.0	2.0	2.5	2.5	3.0
ASPHALT	2.0	2.5	3.0	3.0	3.0

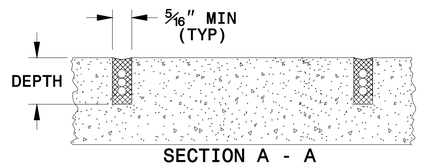

SECTION A - A

SAW CUT OPTIONS

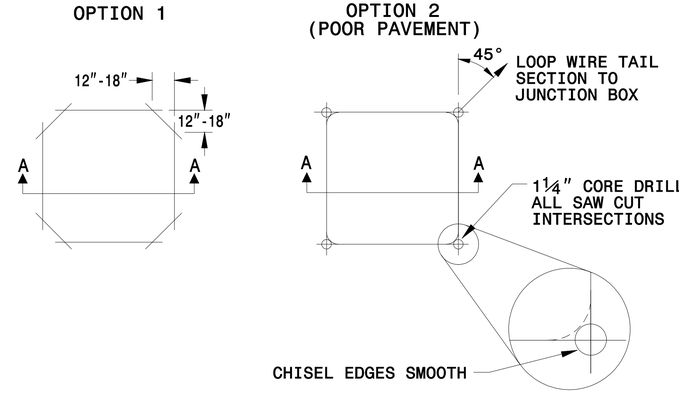
OPTION 1

OPTION 2
(POOR PAVEMENT)

LOOP WINDING METHOD

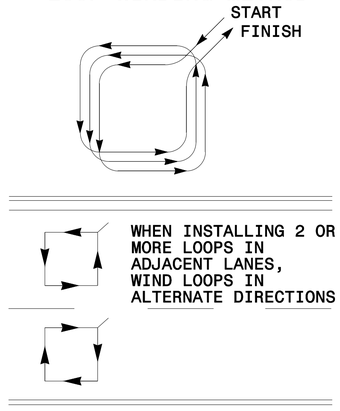

LOOP WIRE TWISTING METHOD

INCORRECT WAY TO TWIST WIRE

CORRECT WAY TO TWIST WIRE

NOTES

1. OVERLAP SAW CUTS AT CORNERS AND INTERSECTION POINTS TO ENSURE UNIFORM SAW SLOT DEPTH.
2. MAINTAIN 12" SPACING BETWEEN LOOP WIRE TAIL SECTIONS.
3. WIRE LOOPS CONNECTED TO THE SAME DETECTOR CHANNEL IN SERIES.
4. LOCATE LOOPS IN CENTER OF LANES UNLESS OTHERWISE SHOWN ON PLANS OR APPROVED BY ENGINEER.

QUADRUPOLE LOOP

SAW CUT OPTIONS

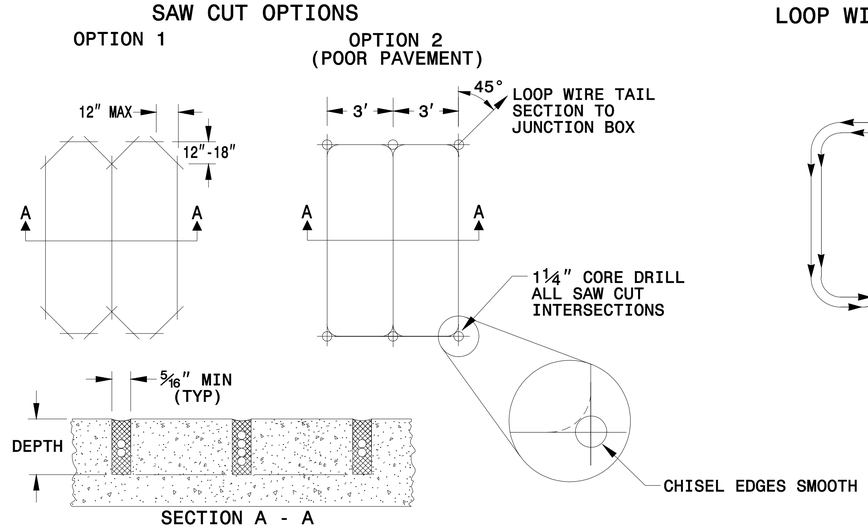
OPTION 1

OPTION 2
(POOR PAVEMENT)

SECTION A - A

DEPTH IS 2.5" FOR CONCRETE AND 3.0" FOR ASPHALT

LOOP WINDING METHOD

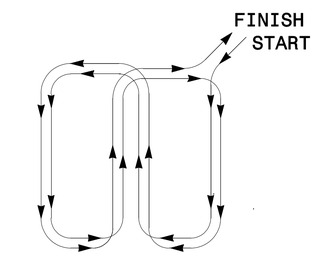

STATE OF NORTH CAROLINA
DEPT. OF TRANSPORTATION
DIVISION OF HIGHWAYS
RALEIGH, N.C.

5-07

ENGLISH DETAIL DRAWING FOR
INDUCTIVE DETECTION LOOPS

SHEET 1 OF 3

1725D01

See Plate for Title

Prepared in the Offices of:

Intelligent Transportation Systems & Signals Unit
STATE OF NORTH CAROLINA · DEPARTMENT OF TRANSPORTATION

750 N. Greenfield Parkway
Garner, NC 27529

SEAL

SIGNATURE DATE

$$$$$SYSTIME$$$$$
$$$$$$$$$$$$$$$$DGN$$$$$$$$$$$$$$$$
$$$$USERNAME$$$$